REVISIONS				
ZONE	REV	DESCRIPTION	DATE	APPROVED
	P01	PRELIMINARY RELEASE	02/15/2011	
	100	RELEASED PER ECN 118975	09/11/2011	

NOTES: UNLESS OTHERWISE SPECIFIED

1. INDICATED DIMENSIONS ARE FOR AN ARRAY SIZE OF 640x512.
2. CONECTOR INTERFACE: SAMTEC STF-30-1.50-L-D-P-TR. MATING CONNECTOR P/N SS4-30-3.50-L-D-K-TR. FOR PIN-OUT DESIGNATIONS SEE QUARK CAMERA USER MANUAL.

(3) INDICATED ALLOWABLE TRAVEL FOR FOCUS.

(4) INDICATED TOLERANCES APPLY TO CAMERA MOUNTING SURFACES ONLY. OTHER SURFACES ARE CAST AND HAVE DRAFT.

5. CAMERA WEIGHT NO LENS 11.6 GRAMS, LENS WEIGHT, 35mm-f1.5: 17.2 GRAMS. TOTAL CAMERA WEIGHT: 28.8 GRAMS

(6) THE INDICATED SURFACE IS THE MOST OPTIMAL MOUNTING/HEATSINKING SURFACE IN ORDER TO PROVIDE THE MOST UNIFORM THERMAL PERFORMANCE OF THE QUARK CAMERA CORE.

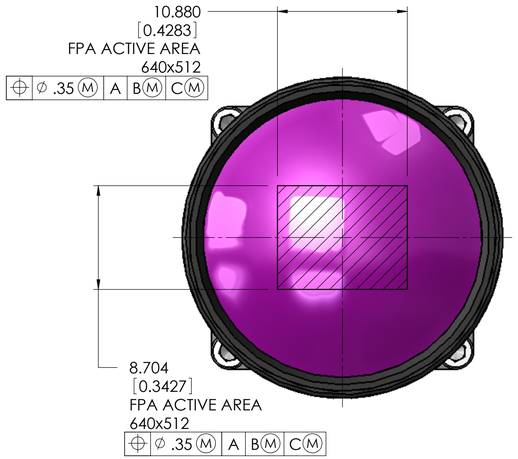

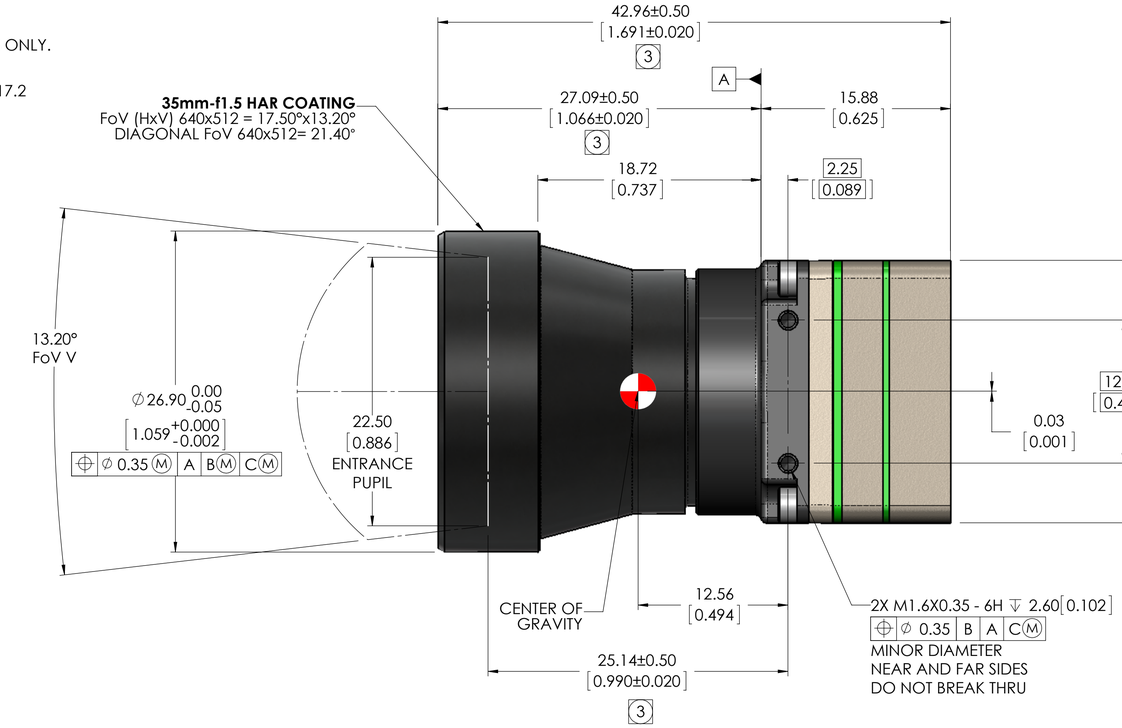

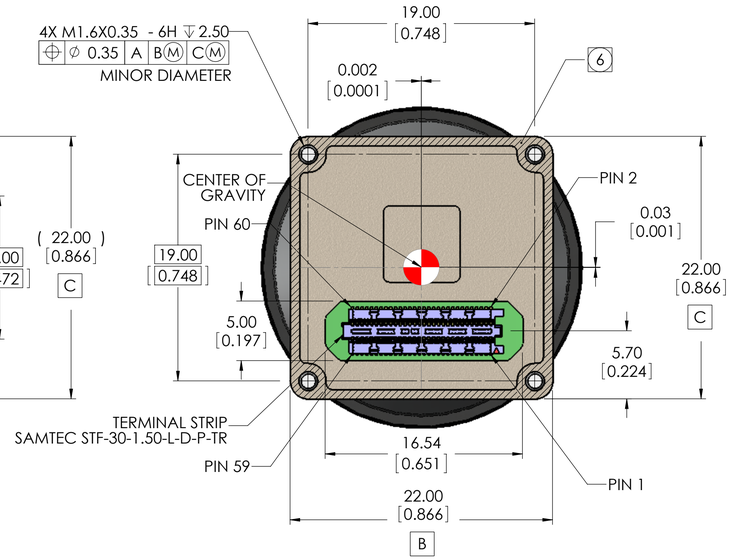

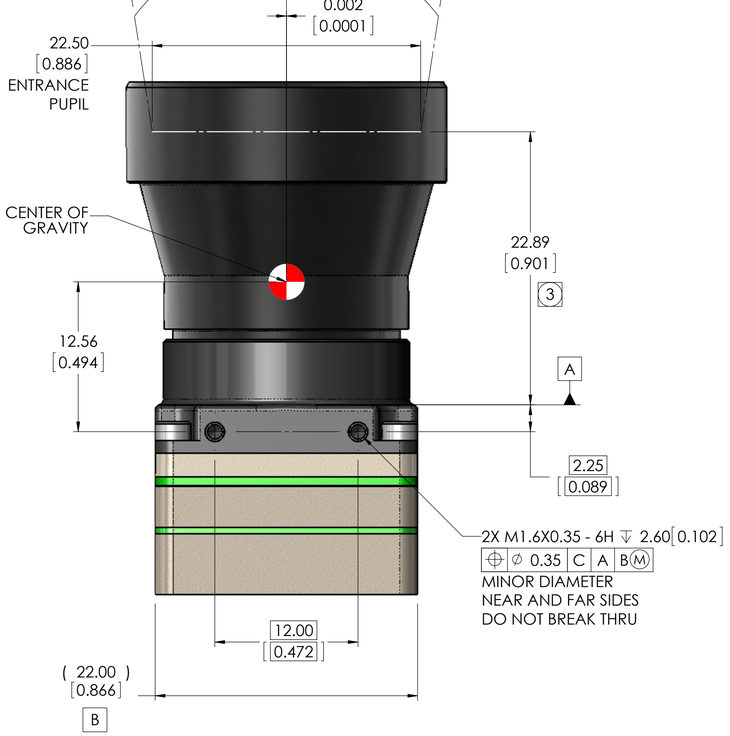

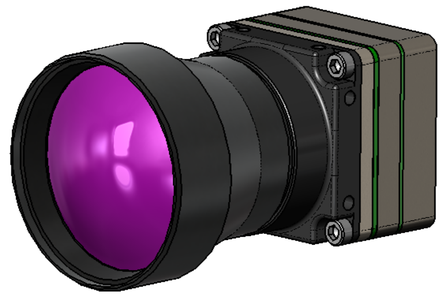

THIRD ANGLE PROJECTION

METRIC

INTERPRET DRAWING PER ASME Y14.5M-1994

UNLESS OTHERWISE SPECIFIED
SURFACE ROUGHNESS 32
.X = ±.25
.XX = ±.13
ANGULAR = ±.5°
FILLET RADII = .13 MAX

PROPRIETARY - FLIR SYSTEMS, INC.

THIS DOCUMENT CONTAINS PROPRIETARY INFORMATION TO FLIR SYSTEMS, INC. THIS INFORMATION MUST BE MAINTAINED IN CONFIDENCE AND USED ONLY IN A MANNER CONSISTENT WITH THE DOCUMENTATION AND ANY EXECUTED NON DISCLOSURE AGREEMENT, AND MY NOT BE DISCLOSED TO ANY THIRD PERSON WITHOUT FLIR'S WRITTEN CONSENT.

THIS DOCUMENT IS CONTROLLED TO FLIR TECHNOLOGY LEVEL 1. THE INFORMATION CONTAINED IN THIS DOCUMENT PERTAINS TO A DUAL USE PRODUCT CONTROLLED FOR EXPORT BY THE EXPORT ADMINISTRATION REGULATIONS (EAR). FLIR TRADE SECRETS CONTAINED HEREIN ARE SUBJECT TO DISCLOSURE RESTRICTIONS AS A MATTER OF LAW. DIVERSION CONTRARY TO US LAW IS PROHIBITED. US DEPARTMENT OF COMMERCE AUTHORIZATION IS NOT REQUIRED PRIOR TO EXPORT OR TRANSFER TO FOREIGN PERSONS OR PARTIES ULESS OTHERWISE PROHIBITED.

MATERIAL

FINISH

UNLESS OTHERWISE SPECIFIED ALL MEASUREMENTS ARE IN MM. ALL DIMENSIONS IN [ ] ARE INCHES. DO NOT SCALE DRAWING.

CALC WT: 24.506 GRAMS

PROJECT NO.

APPROVALS		DATE
DWN	COVINGTON	09/11/12
CHK		
DSGN	COVINGTON	08/01/11
ENG		
APP		

FLIR Systems, Inc.
70 Castilian Drive
Goleta, CA 93117

TITLE: **IDD, QUARK 640 CAMERA CORE, 35mm-f1.5**

SIZE	CAGE	DWG NO.	REV
D	064Y2	50-640 35mm-f1.5	100

SCALE 4:1 | PRINTED: 9/11/2012 | SHEET 1 OF 1

SOLIDWORKS MODEL: 50-Quark Camera Core
MODEL REVISION: G-WC

DWG NO 50-640 35mm-f1.5 | SH 1 | REV 100